FLEXIBLE ENERGY SUPPLY SYSTEMS THROUGH CABLE TROLLEYS

industrias
GALARZA, S.A.

3-98 - PUBLICATION NR. 12-I

- Maximum bundle dimension = **58 x 20 mm.**
- Load per trolley = 30 Kgr.
- Profile made of galvanized steel.
- Joints, supports and bodies made of zinc plated steel.
- Ball bearings type Z-Z made of steel.
- Saddle made of polypropilene.
- Upon request, the body and saddle is supplied epoxi coated for aggresive environments.

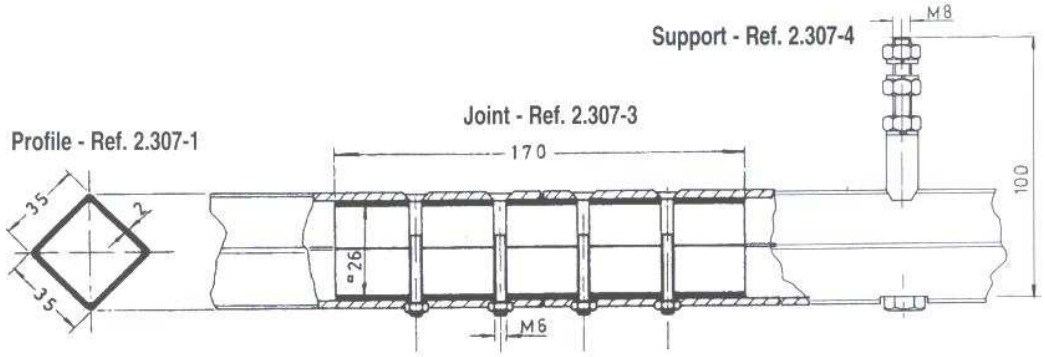

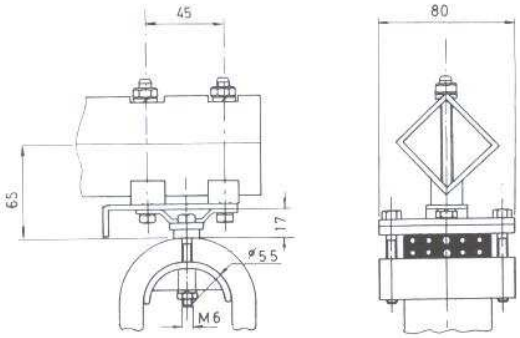

End Clamp - Ref. 2.307-2

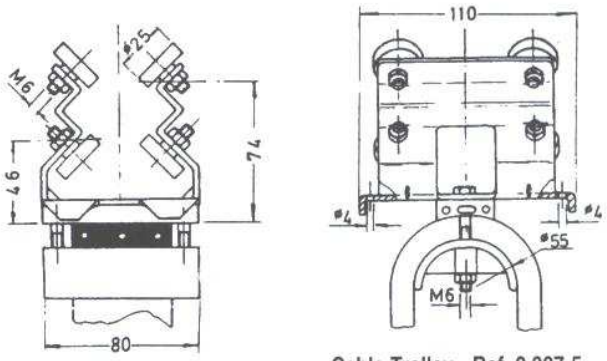

Cable Trolley - Ref. 2.307-5

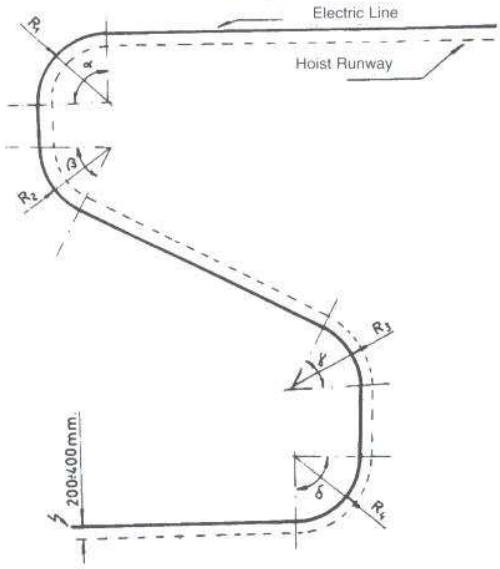

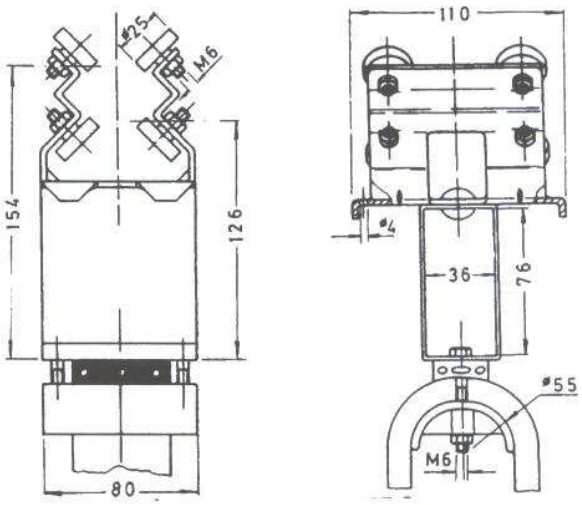

Towing Trolley - Ref. 2.307-6

PROFILE
Ref. 2331-1

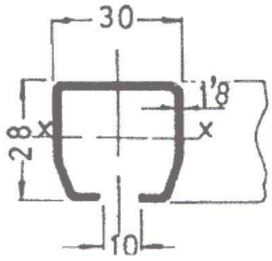

- Galvanized steel.
- Profile length: 5 metre.

Section: 1,67 cm^2.
Ix: 1,617 cm^4.
Wx: 1,006 cm^3.

JOINT
Ref. 2331-3

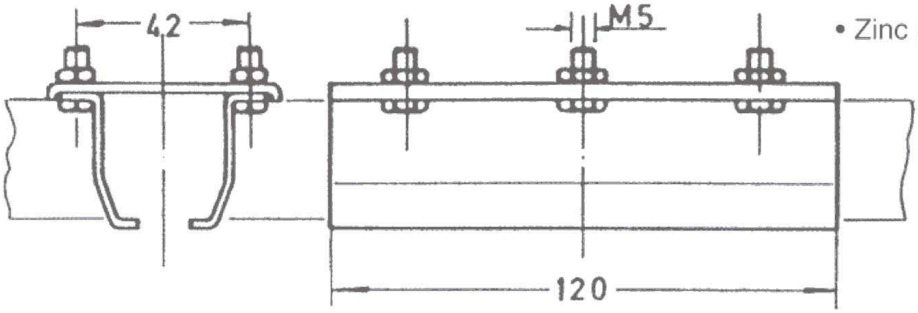

- Zinc plated steel.

SUPPORT
Ref. 2331-4

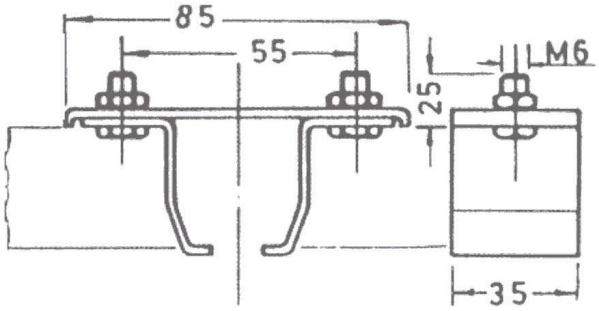

- Zinc plated steel.

SUPPORT
Ref. 2331-4-A
(with setscrew)

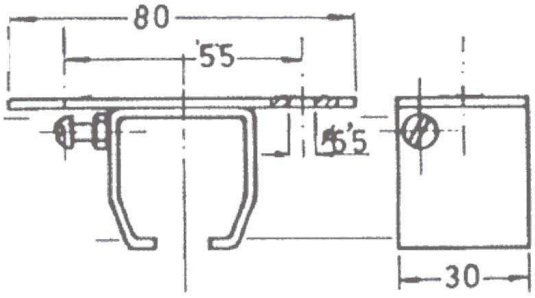

- Zinc plated steel.

END STOP
Ref. 2309-2

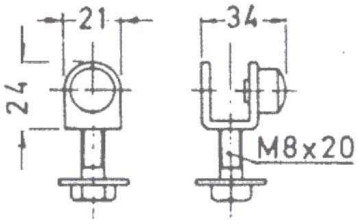

- Body and screw: zinc plated steel.
- Buffer: rubber.

- Maximum bundle dimension for all of these references = **58 x 20 mm.**
- Upon request the metallic parts (bodies and cable holders) are supplied epoxi coated for aggresive atmospheres.

END CLAMP
Ref. 2331-2

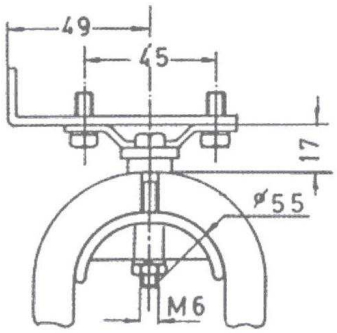

- Body and screws: zinc plated steel.
- Cable holder: translucent polypropylene.

END CLAMP
Ref. 2331-2-S

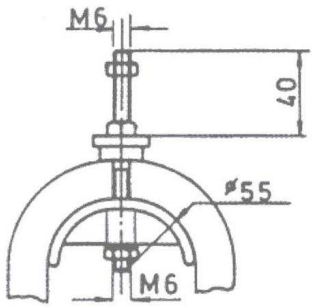

- Body and screws: zinc plated steel.
- Cable holder: translucent polypropylene.

END CLAMP
Ref. 2331-C-2

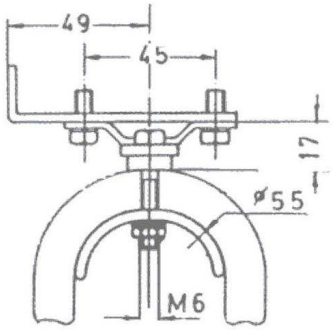

- Body, cable holder and screws: zinc plated steel.

END CLAMP
Ref. 2331-C-2-S

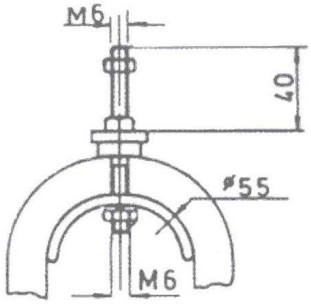

- Body, cable holder and screws: zinc plated steel.

CABLE TROLLEY Ref. 2331-5

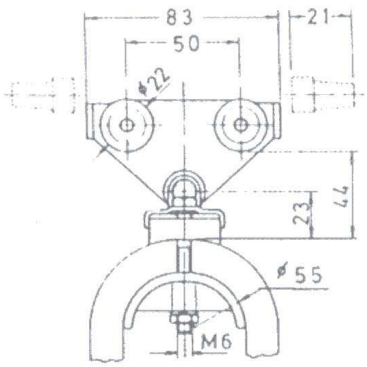

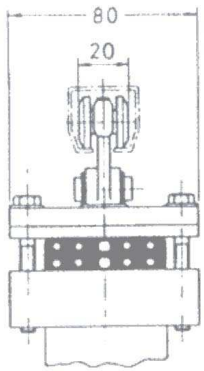

- Body: white polypropylene.
- Wheels: zinc plated steel.
- Axles and screws: zinc plated steel.
- Cable holder: translucent polypropylene.

- Load per trolley = 20 Kgr.

CABLE TROLLEY Ref. 2331-C-5

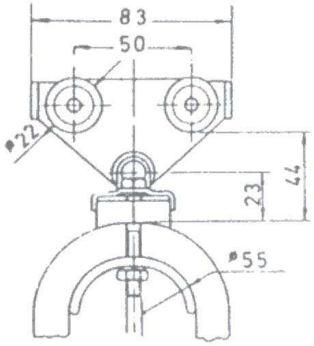

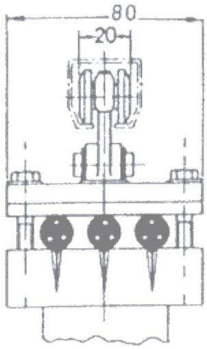

- Body: white polypropylene.
- Wheels: zinc plated steel.
- Axles and screws: zinc plated steel.
- Cable holder: zinc plated steel.

- Load per trolley = 20 Kgr.

CABLE TROLLEY Ref. 2332-5

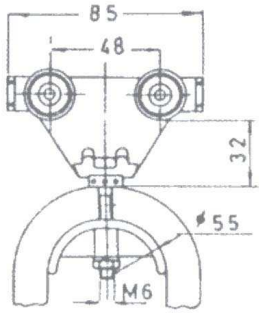

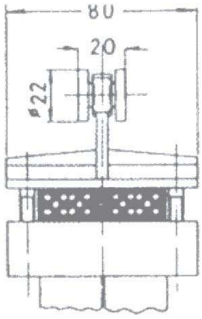

- Body: white polypropylene.
- Wheels: white polypropylene.
- Axles and screws: zinc plated steel.
- Cable holder: translucent polypropylene.

- Load per trolley = 12 Kgr.

CABLE TROLLEY Ref. 2332-L-5

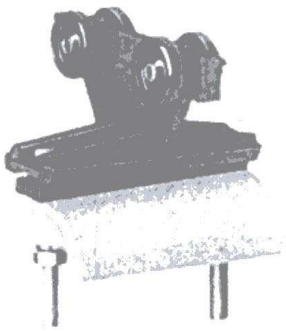

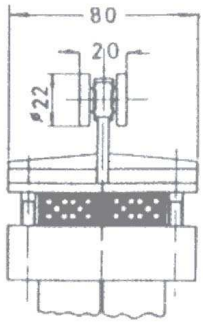

- Body: white polypropylene.
- Wheels: zinc plated steel.
- Axles and screws: zinc plated steel.
- Cable holder: translucent polypropylene.

- Load per trolley = 12 Kgr.

CABLE TROLLEY Ref. 2332-C-5

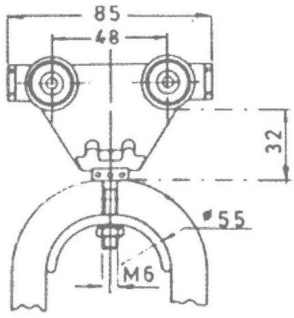

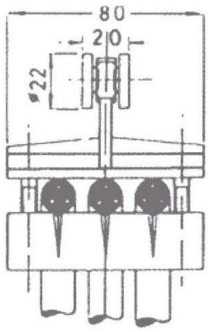

- Body: white polypropylene.
- Wheels: white polypropylene.
- Axles and screws: zinc plated steel.
- Cable holder: zinc plated steel.

- Load per trolley = 12 Kgr.

CABLE TROLLEY Ref. 2332-LC-5

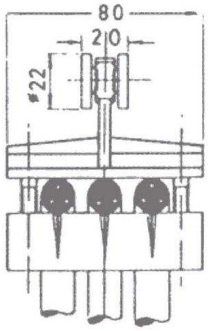

- Body: white polypropylene.
- Wheels: zinc plated steel.
- Axles and screws: zinc plated steel.
- Cable holder: zinc plated steel.

- Load per trolley = 12 Kgr.

CABLE TROLLEY Ref. 2400-5

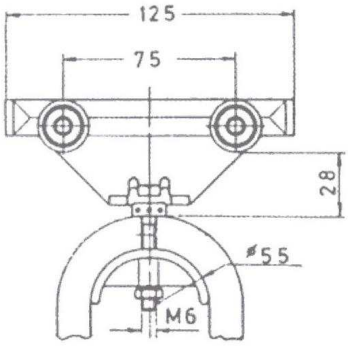

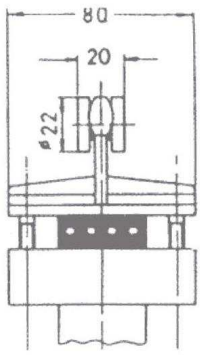

- Body: aluminium.
- Wheels: zinc plated steel.
- Axles and screws: zinc plated steel.
- Cable holder: translucent polypropylene.

- Load per trolley = 20 Kgr.

CABLE TROLLEY Ref. 2400-C-5

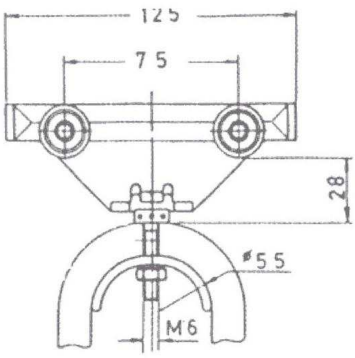

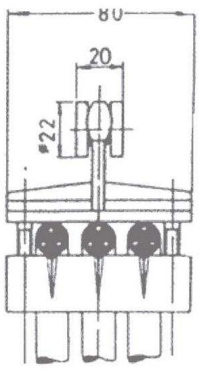

- Body: aluminium.
- Wheels: zinc plated steel.
- Axles and screws: zinc plated steel.
- Cable holder: zinc plated steel.

- Load per trolley = 20 Kgr.

CABLE TROLLEY Ref. 2401-5

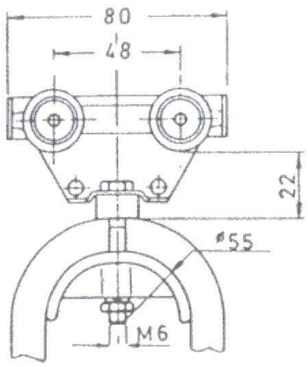

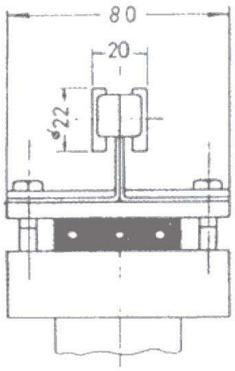

- Body: zinc plated steel.
- Wheels: zinc plated steel.
- Axles and screws: zinc plated steel.
- Cable holder: translucent polypropylene.

- Load per trolley = 20 Kgr.

CABLE TROLLEY Ref. 2401-C-5

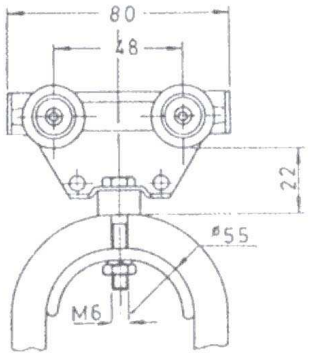

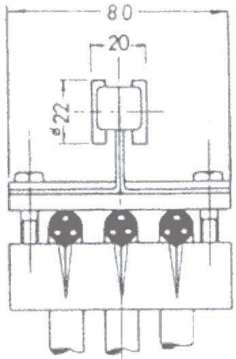

- Body: zinc plated steel.
- Wheels: zinc plated steel.
- Axles and screws: zinc plated steel.
- Cable holder: zinc plated steel.

- Load per trolley = 20 Kgr.

CABLE TROLLEY Ref. 2330-22

- Body: zinc plated steel.
- Wheels: zinc plated steel.

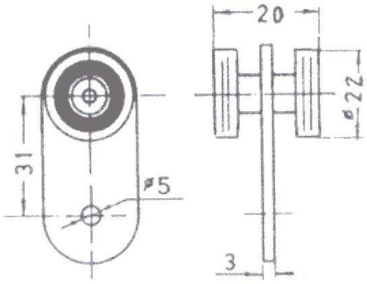

- Load per trolley = 8 Kgr.

CABLE TROLLEY Ref. 2330-D-22

- Body: zinc plated steel.
- Wheels: zinc plated steel.

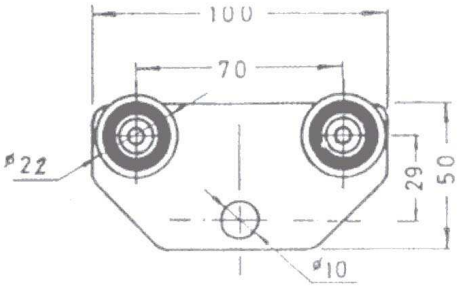

- Load per trolley = 16 Kgr.

TOWING TROLLEY Ref. 2331-6

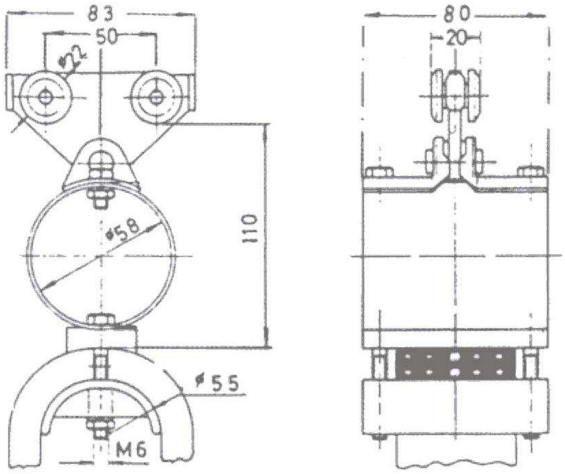

- Body: white polypropylene.
- Wheels: zinc plated steel.
- Axles and screws: zinc plated steel.
- Cable holder: translucent polypropylene.
- Towing attachment: zinc plated steel.

- Load per trolley = 20 Kgr.

TOWING TROLLEY Ref. 2331-C-6

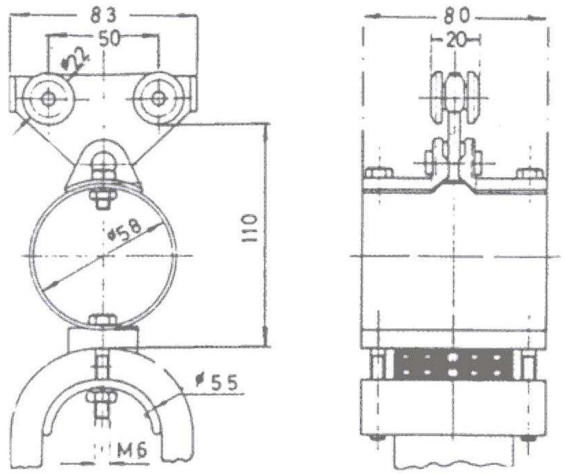

- Body: white polypropylene.
- Wheels: zinc plated steel.
- Axles and screws: zinc plated steel.
- Cable holder: zinc plated steel.
- Towing attachment: zinc plated steel.

- Load per trolley = 20 Kgr.

TOWING TROLLEY Ref. 2400-6

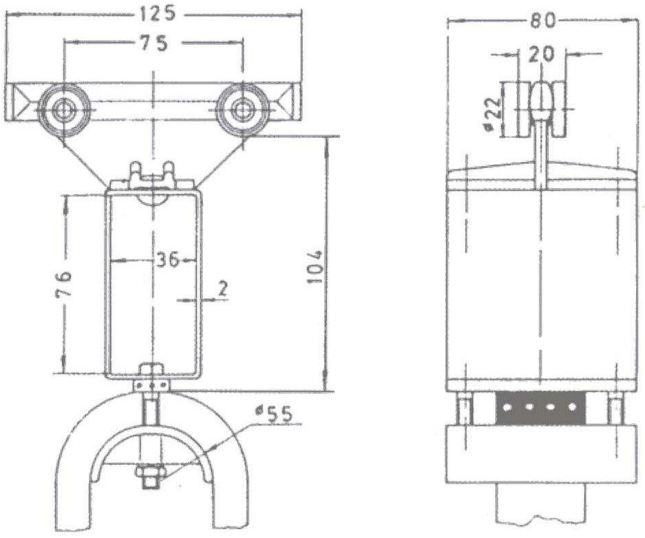

- Body: aluminium.
- Wheels: zinc plated steel.
- Axles and screws: zinc plated steel.
- Cable holder: translucent polypropylene.
- Towing attachment: zinc plated steel.

- Load per trolley = 20 Kgr.

TOWING TROLLEY Ref. 2400-C-6

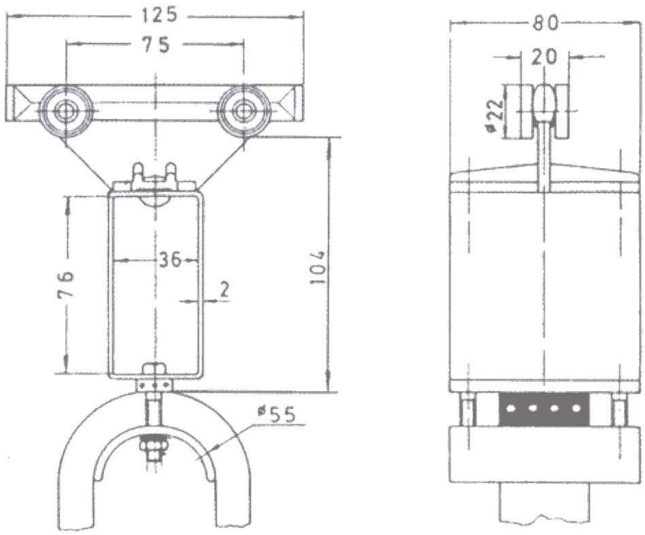

- Body: aluminium.
- Wheels: zinc plated steel.
- Axles and screws: zinc plated steel.
- Cable holder: zinc plated steel.
- Towing attachment: zinc plated steel.

- Load per trolley = 20 Kgr.

TOWING TROLLEY Ref. 2401-6

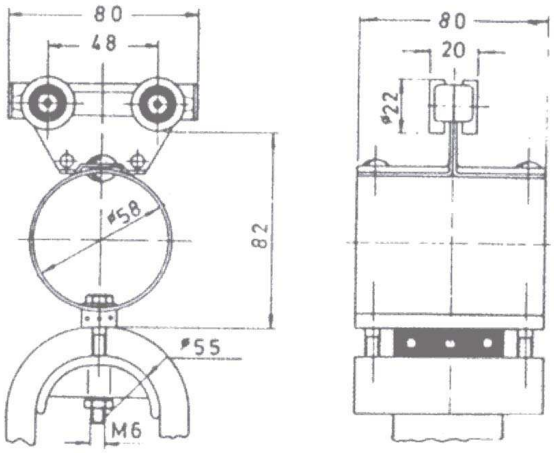

- Body: zinc plated steel.
- Wheels: zinc plated steel.
- Axles and screws: zinc plated steel.
- Cable holder: translucent polypropylene.
- Towing attachment: zinc plated steel.

- Load per trolley = 20 Kgr.

TOWING TROLLEY Ref. 2401-C-6

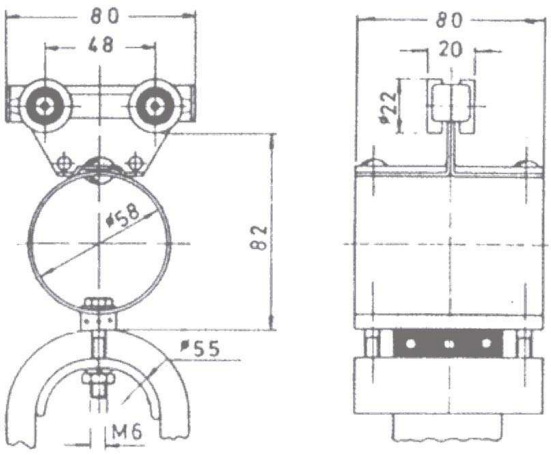

- Body: zinc plated steel.
- Wheels: zinc plated steel.
- Axles and screws: zinc plated steel.
- Cable holder: zinc plated steel.
- Towing attachment: zinc plated steel.

- Load per trolley = 20 Kgr.

STATION TOWING TROLLEY
Ref. 2331-7

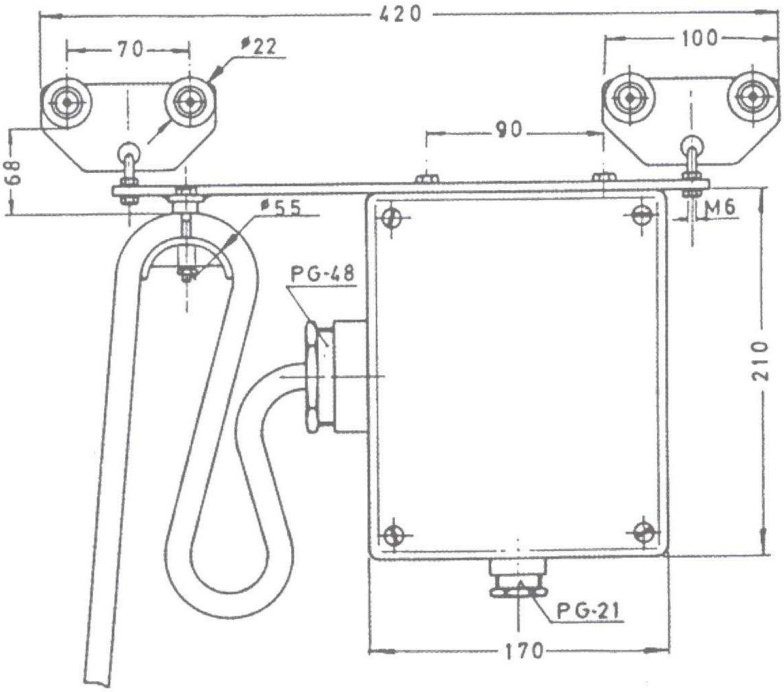

- Bodies, support plates, wheels, axles and screws: zinc plated steel.
- Cable holder: translucent polypropylene.
- Cable glands: polyamide.
- Terminal box: polyester and glass fiber.

STATION TOWING TROLLEY
Ref. 2331-7-C-16
Ref. 2331-7-C-24

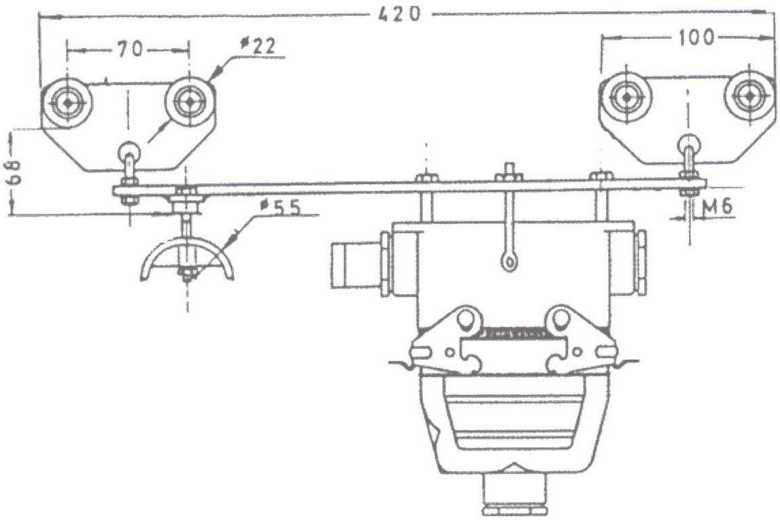

- Bodies, support plates, wheels, axles and screws: zinc plated steel.
- Cable holder: translucent polypropylene.
- Cable glands: polyamide or brass.
- Multipole connector of 16 or 24 poles: formed aluminium.

- Maximum bundle dimension for all of these references = **58 x 20 mm.**
- Upon request the metallic parts (bodies and cable holders) are supplied epoxi coated for aggresive atmospheres.

END CLAMP
Ref. 2400-PM85-2

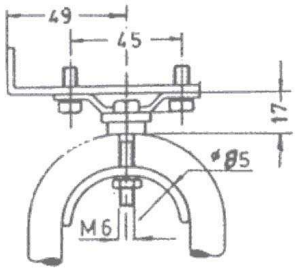

- Body, cable holder and screws: zinc plated steel.

CABLE TROLLEY
Ref. 2400-PM85-5

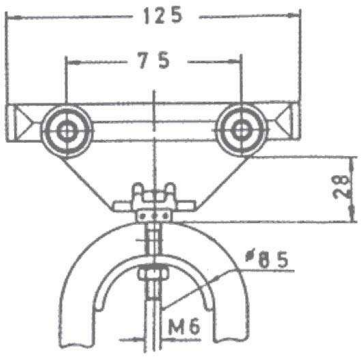

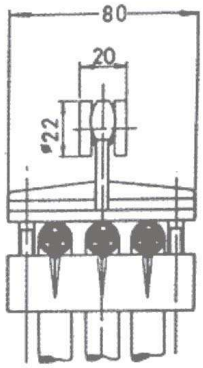

- Body: aluminium.
- Wheels: zinc plated steel.
- Axles and screws: zinc plated steel.
- Cable holder: zinc plated steel.

- Load per trolley = 20 Kgr.

TOWING TROLLEY
Ref. 2400-PM85-6

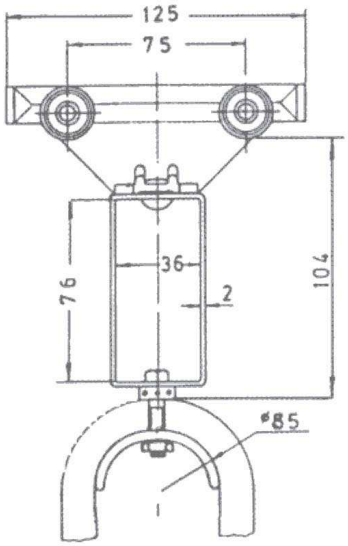

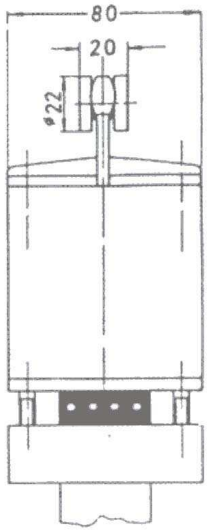

- Body: aluminium.
- Wheels: zinc plated steel.
- Axles and screws: zinc plated steel.
- Cable holder: zinc plated steel.
- Towing attachment: zinc plated steel.

- Load per trolley = 20 Kgr.

SPECIAL TROLLEYS FOR ROUND CABLES

TROLLEYS
Ref. 2338

- Body: zinc plated steel.
- Wheels, screws and axles: zinc plated steel.
- Cable holders: aluminium.
- Towing attachment: zinc plated steel.

They can make rotation in order to facilitate the parking.

When ordering, add to the reference the necessary cable holder(s), followed by the indicative number: end clamp (-2), cable trolley (-5) or towing trolley (-6).

Examples:

2338+C+A-2
2338+C+B+A-6
2338+B-5

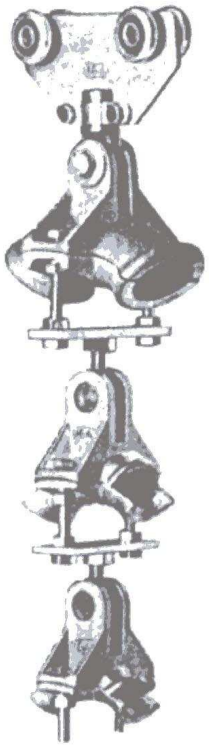

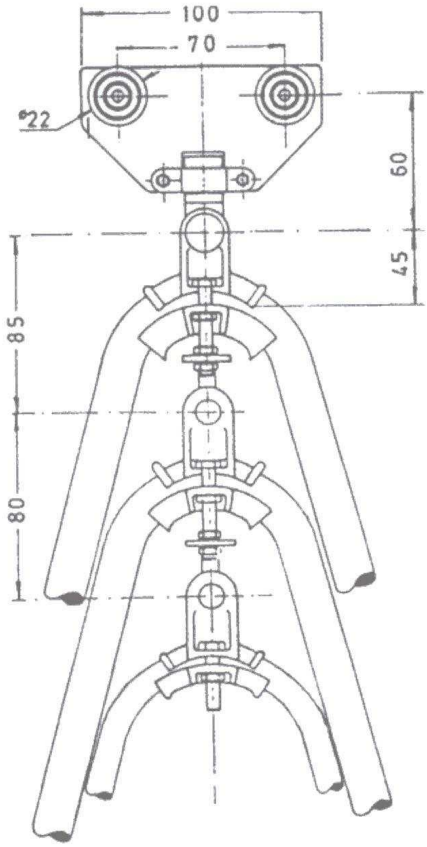

Cable Trolley - Ref. 2.338 + C + B + A - 5

Cable holder	Ø (mm) Hose
A	from 8 to 15
B	from 16 to 24
C	from 25 to 35

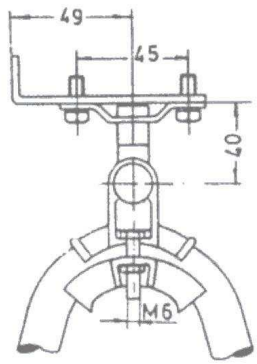

End clamp - Ref. 2.338 + C - 2

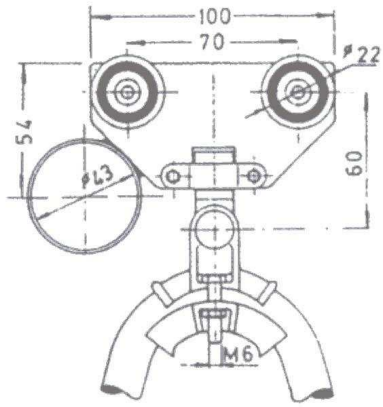

Towing trolley - Ref. 2.338 + C - 6

SPECIAL CABLE TROLLEYS

CABLE TROLLEY Ref. 2324-24-5

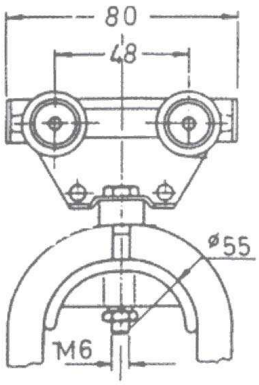

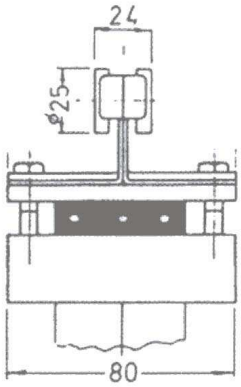

- Body: zinc plated steel.
- Wheels: zinc plated steel.
- Axles and screws: zinc plated steel.
- Cable holder: translucent polypropylene.

CABLE TROLLEY Ref. 2324-25-5

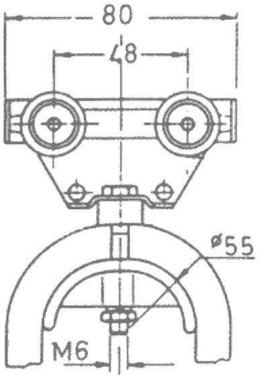

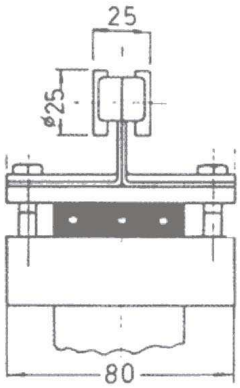

- Body: zinc plated steel.
- Wheels: zinc plated steel.
- Axles and screws: zinc plated steel.
- Cable holder: translucent polypropylene.

CABLE TROLLEY Ref. 2401-25-5-KB

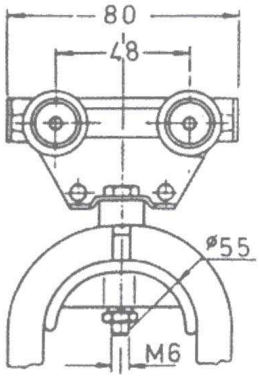

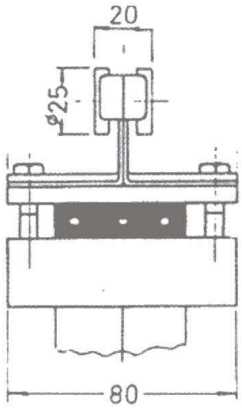

- Body: zinc plated steel.
- Wheels: zinc plated steel.
- Axles and screws: zinc plated steel.
- Cable holder: translucent polypropylene.

MOUNTING ARRANGEMENT Ref. CM-2

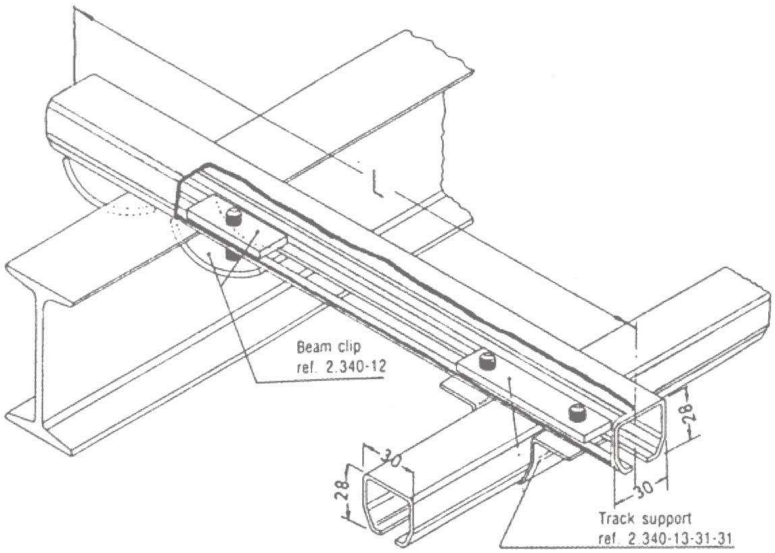

- Beam clip Ref. 2340-12 made of zinc plated steel.
- Support arm made of profile Ref. 2331-1, galvanized steel.
- Track support Ref. 2340-13-31-31 made of zinc plated steel.

Indicate total length (L) of the support arm.
Example: CM-2-500.

MOUNTING ARRANGEMENT Ref. CM-3

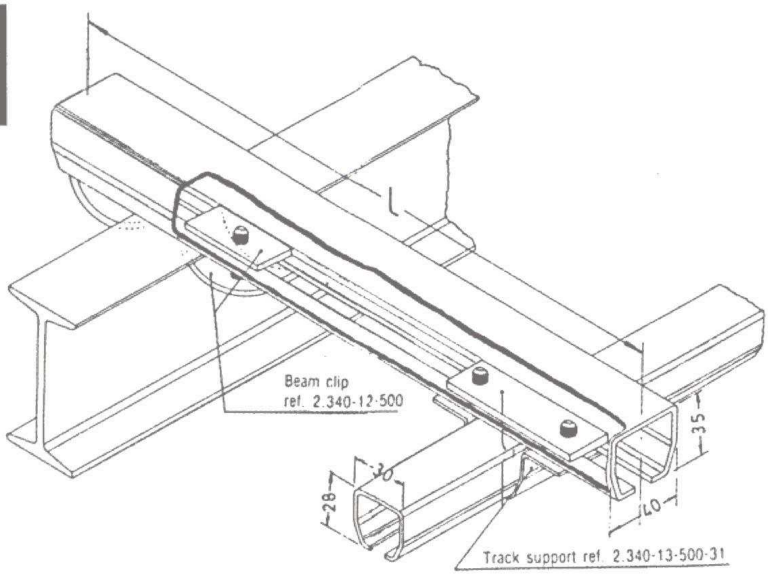

- Beam clip Ref. 2340-12 -500 made of zinc plated steel.
- Support arm made of profile Ref. 2500-1, galvanized steel.
- Track support Ref. 2340-13-500-31 made of zinc plated steel.

Indicate total length (L) of the support arm.
Example: CM-3-450.

SUSPENSION BRACKET SUPPORT Ref. 2600-120

- Body made of steel.
- Plates and screws made of zinc plated steel.

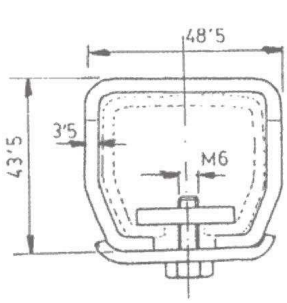

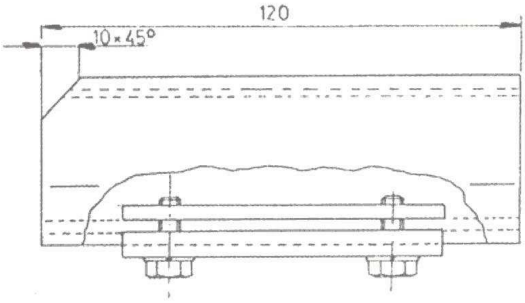

SUPPORT
(with setscrew)
Ref. 2331-4-A-500

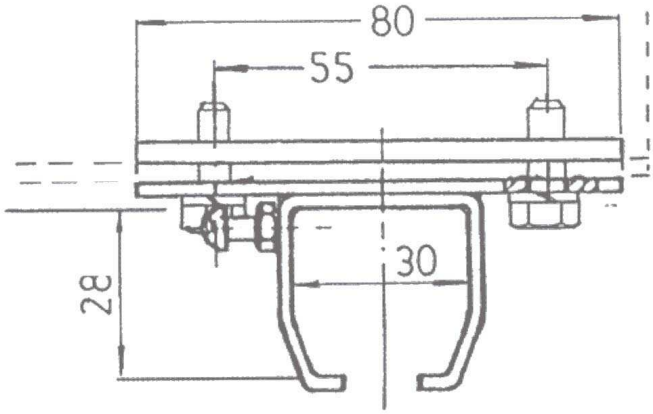

- Zinc plated steel.
- Support track: 2500-1.

BEAM CLIP
Ref. 2340-12-500

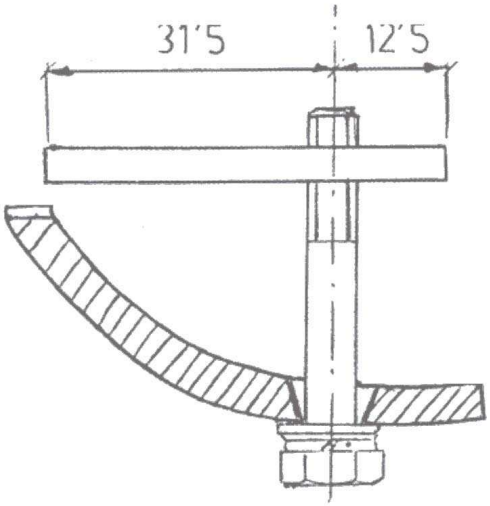

- Zinc plated steel.
- Hex. head screw M8x50 DIN931.
- Flat ring 8'4 DIN125B.
- Spring washer 8'4 DIN127B.

BEAM CLIP
Ref. 2340-12-500+10+AD

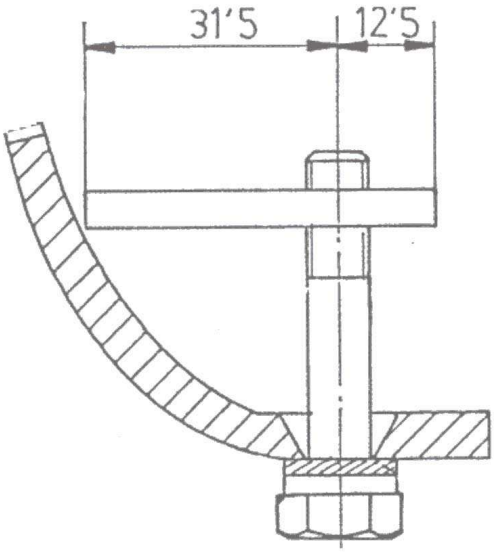

- Zinc plated steel.
- Hex. head screw M8x50 DIN931.
- Serrated ring M8 DIN6798A.
- Spring washer 8'4 DIN127B.

TRACK SUPPORT
Ref. 2340-13-500-31

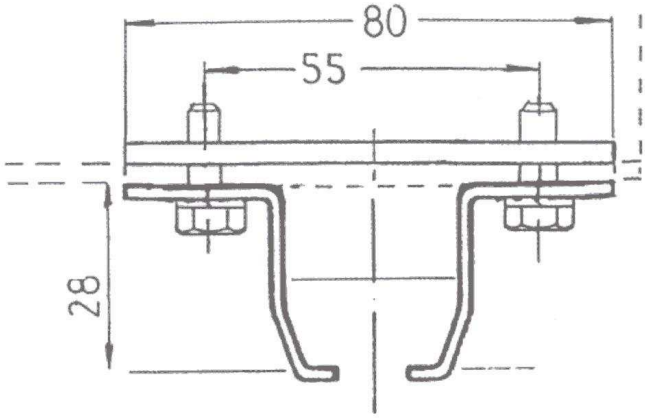

- Zinc plated steel.
- Support track: 2331-1.

CABLE CLAMP
Ref. 2331-SC-1

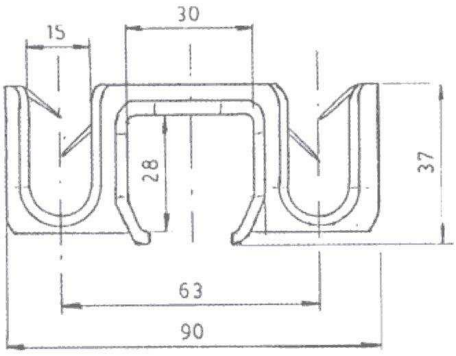

- Made of polypropylene with glass fiber.

CABLE CLAMP
Ref. 2331-SC-2

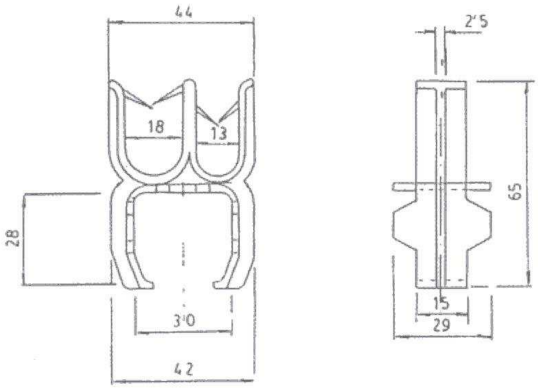

- Made of polypropylene with glass fiber.

CLAMP
Ref. B-58

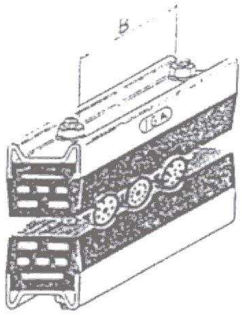

- Two zinc plated steel profiles.
- Two rubber pieces.
- Nuts: brass.
- Bolts: zinc plated steel.
- Max. bunddle width: 58 mm.

PROFILE
Ref. 2500-1

- Galvanized steel.
- Profile length: 5 metre.

Section: 3,022 cm^2.
Ix: 4,985 cm^4.
Wx: 2,611 cm^3.

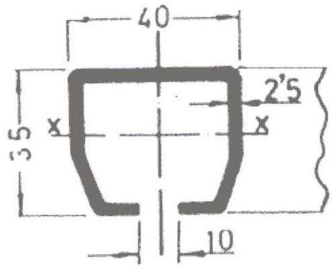

JOINT
Ref. 2500-3

- Zinc plated steel.

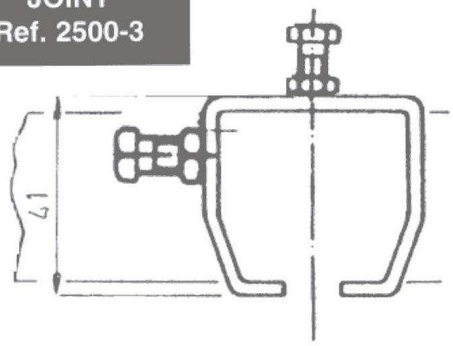

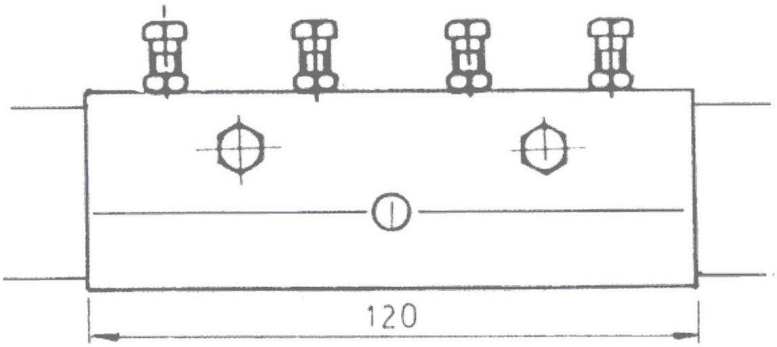

SUPPORT
Ref. 2500-4

- Zinc plated steel.

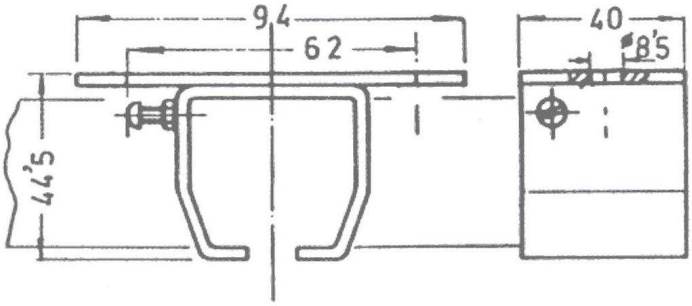

END STOP
Ref. 2502-2

- Zinc plated steel.

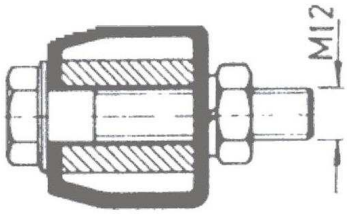

- Maximum bundle dimension for all of these references = **90 x 30 mm.** (Flat cables) or 4 round cables ø = 15 mm.
- Upon request the metallic parts (bodies and cable holders) are supplied epoxi coated for aggresive atmospheres.
- Load per trolley = 40 Kgr.
- Ball bearings type Z-Z.

END CLAMP
Ref. 2500-2

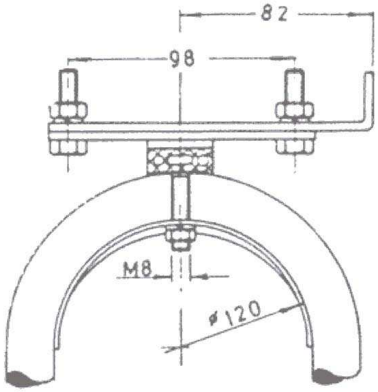

- Body, screws and cable holder: zinc plated steel.

CABLE TROLLEY
Ref. 2500-5

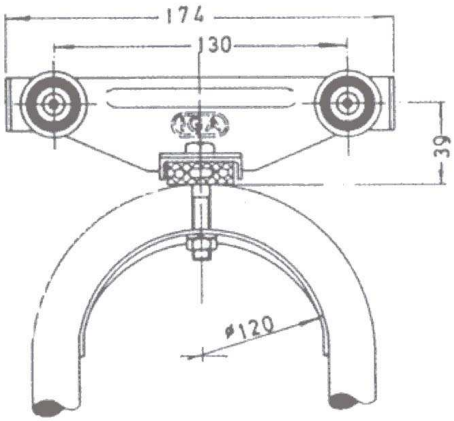

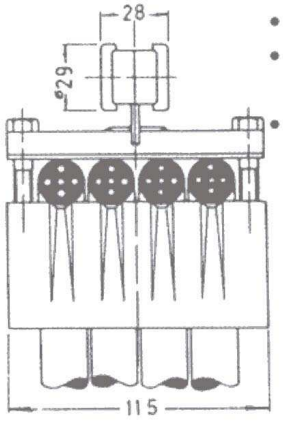

- Body: zinc plated steel.
- Wheels: zinc plated steel.
- Axles and screws: zinc plated steel.
- Cable holder: zinc plated steel.

TOWING TROLLEY
Ref. 2500-6

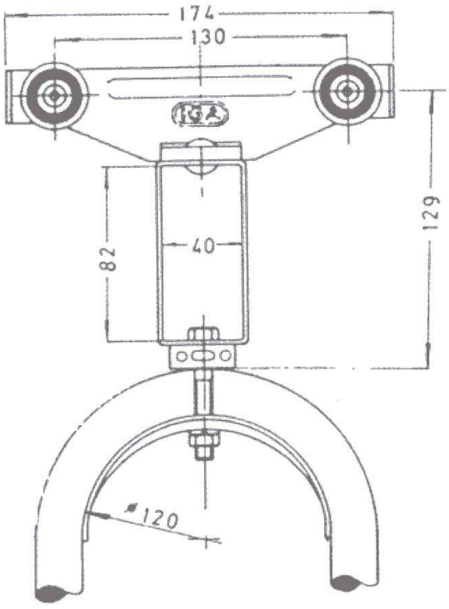

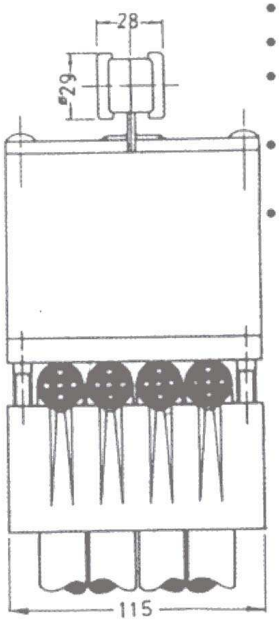

- Body: zinc plated steel.
- Wheels: zinc plated steel.
- Axles and screws: zinc plated steel.
- Cable holder: zinc plated steel.
- Towing attachment: zinc plated steel.

- Maximum bundle dimension for all of these references = **58 x 20 mm.** (Flat cables).
- Upon request the metallic parts (bodies and cable holders) are supplied epoxi coated for aggresive atmospheres.
- Load per trolley = 40 Kgr.
- Ball bearings type Z-Z.

END CLAMP
Ref. 2500-100-2

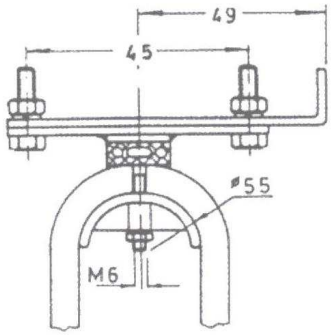

- Body and screws: zinc plated steel.
- Cable holder: translucent polypropylene.

CABLE TROLLEY
Ref. 2500-100-5

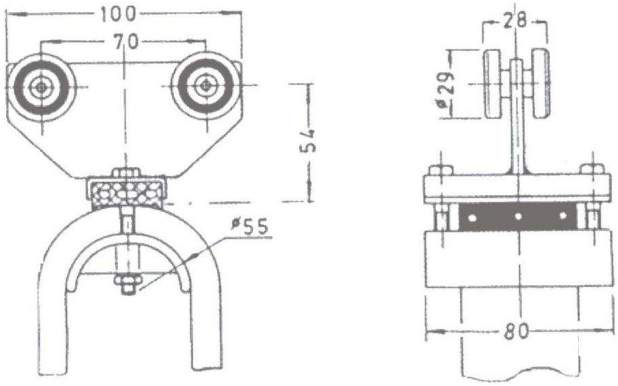

- Body: zinc plated steel.
- Wheels: zinc plated steel.
- Axles and screws: zinc plated steel.
- Cable holder: translucent polypropylene.

TOWING TROLLEY
Ref. 2500-100-6

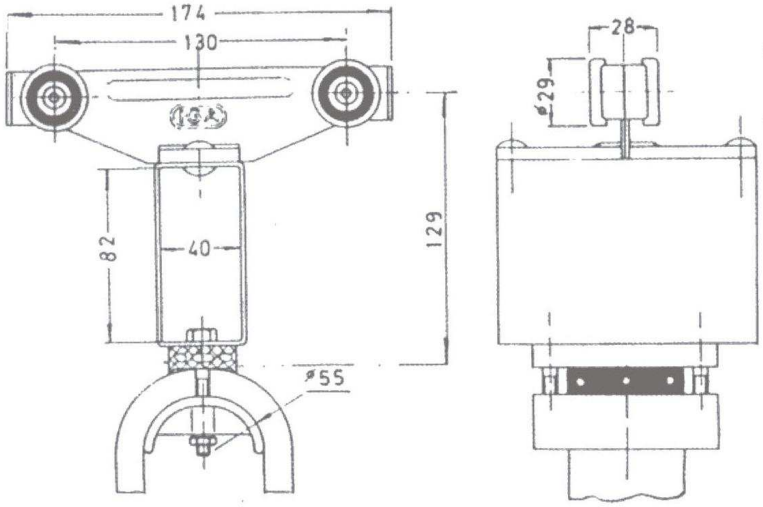

- Body: zinc plated steel.
- Wheels: zinc plated steel.
- Axles and screws: zinc plated steel.
- Cable holder: translucent polypropylene.
- Towing attachment: zinc plated steel.

- Maximum bundle dimension for all of these references = **65 x 25 mm.** (Flat cables).
- Upon request the metallic parts (bodies and cable holders) are supplied epoxi coated for aggresive atmospheres.
- Load per trolley = 40 Kgr.
- Ball bearings type Z-Z.

END CLAMP
Ref. 2500-150-2

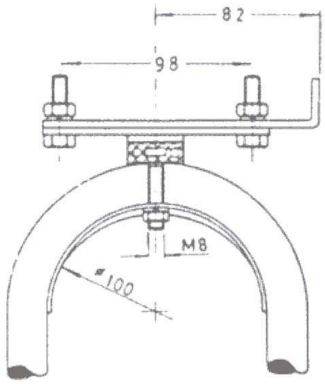

- Body, screws and cable holder: zinc plated steel.

CABLE TROLLEY
Ref. 2500-150-5

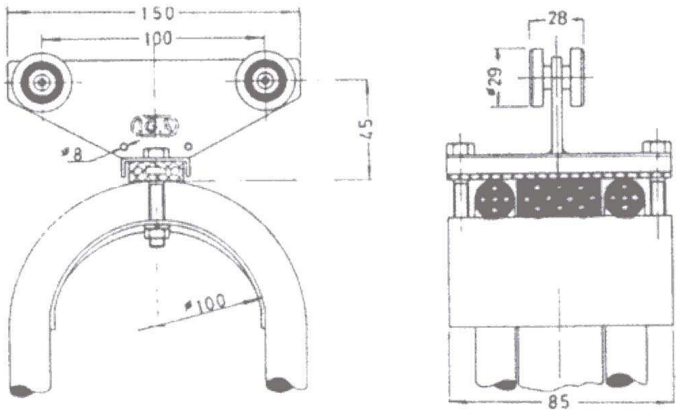

- Body: zinc plated steel.
- Wheels: zinc plated steel.
- Axles and screws: zinc plated steel.
- Cable holder: zinc plated steel.

TOWING TROLLEY
Ref. 2500-150-6

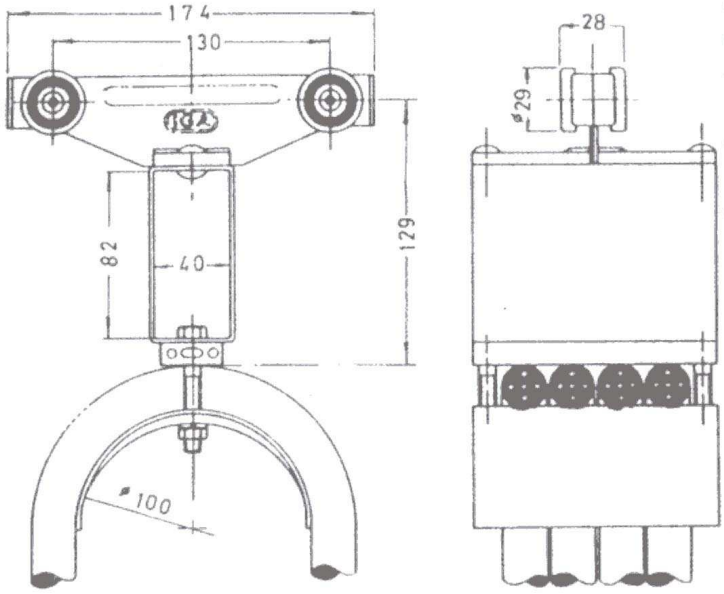

- Body: zinc plated steel.
- Wheels: zinc plated steel.
- Axles and screws: zinc plated steel.
- Cable holder: zinc plated steel.
- Towing attachment: zinc plated steel.

STATION TOWING TROLLEY Ref. 2500-7

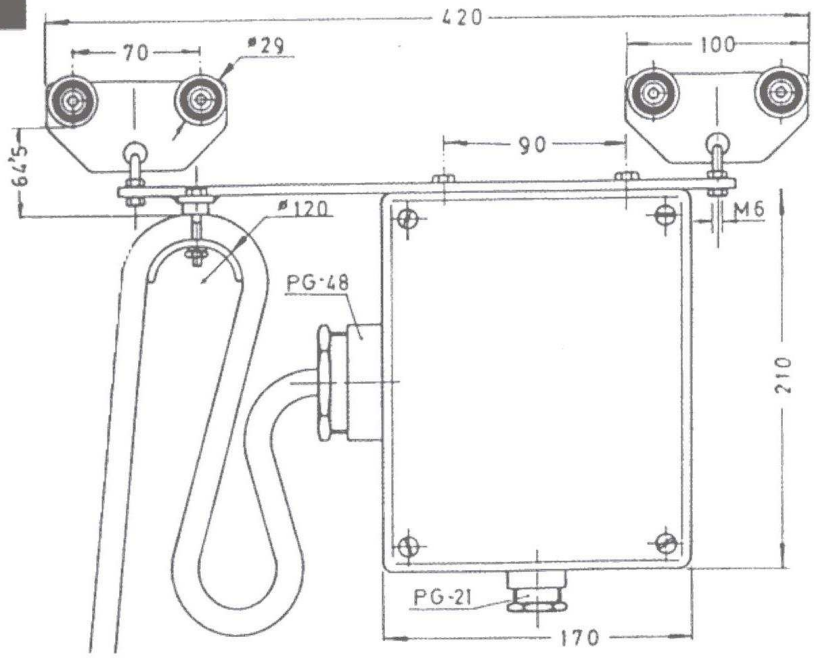

- Bodies, support plates, wheels, axles and screws: zinc plated steel.
- Cable holder: zinc plated steel.
- Cable glands: polyamide.
- Terminal box: polyester and glass fiber.

STATION TOWING TROLLEY Ref. 2500-7-C-16 Ref. 2500-7-C-24

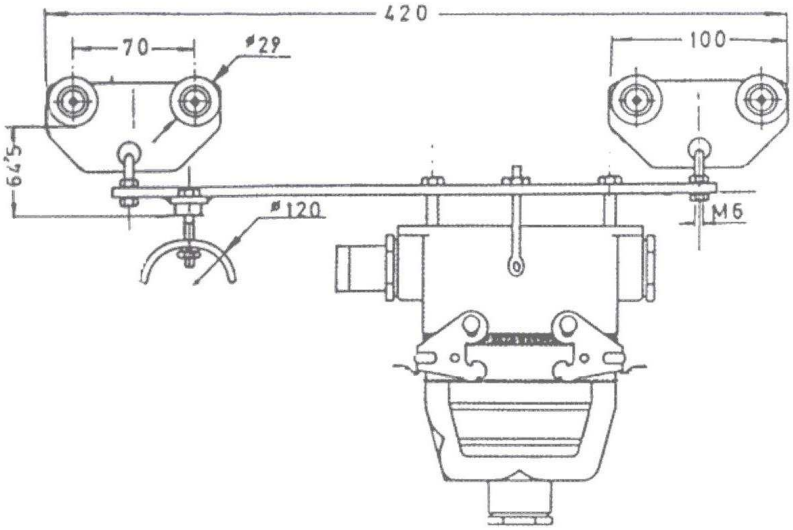

- Bodies, support plates, wheels, axles and screws: zinc plated steel.
- Cable holder: zinc plated steel.
- Cable glands: polyamide or brass.
- Multipole connector of 16 or 24 poles: formed aluminium.

SPECIAL TROLLEYS FOR ROUND CABLES

TROLLEY
Ref. 2504

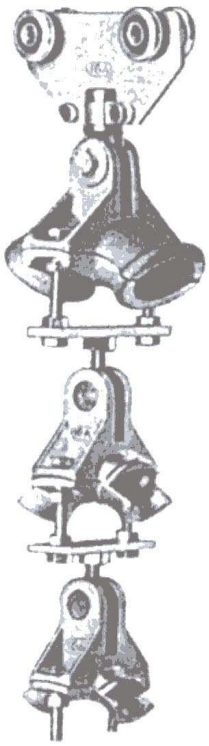

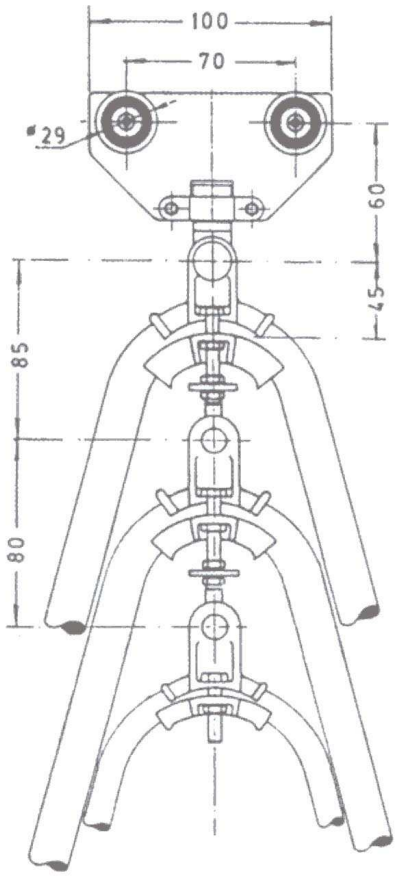

Cable Trolley - Ref. 2.504+C+B+A-5

- Body: zinc plated steel.
- Wheels, screws and axles: zinc plated steel.
- Cable holders: aluminium.
- Towing attachment: zinc plated steel.

They can make rotation in order to facilitate the parking.

When ordering, add to the reference the necessary cable holder(s), followed by the indicative number: end clamp (-2), cable trolley (-5) or towing trolley (-6).

Examples:

2504+C+A-2
2504+C+B+A-6
2504+B-5

Cable holder	Ø (mm) Hose
A	from 8 to 15
B	from 16 to 24
C	from 25 to 35

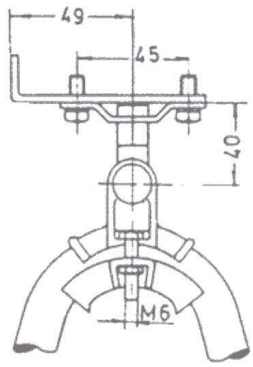

End clamp - Ref. 2.504+C-2

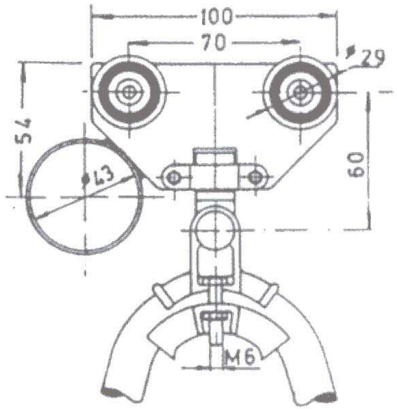

Towing trolley - Ref. 2.504+C-6

SPECIAL CABLE TROLLEYS

CABLE TROLLEY Ref. 2330-29

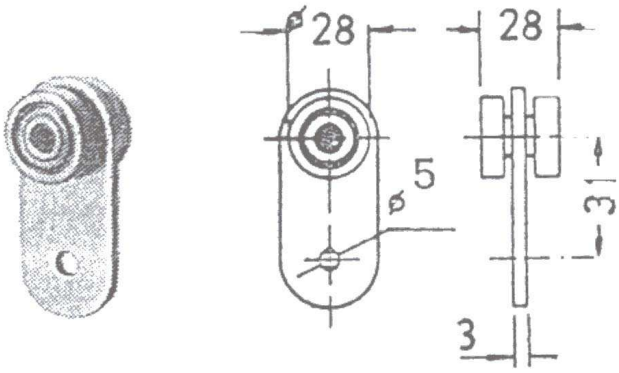

- Body: zinc plated steel.
- Wheels: zinc plated steel.
- Axle: zinc plated steel.

- Load per trolley = 20 Kgr.

CABLE TROLLEY Ref. 2330-D-29

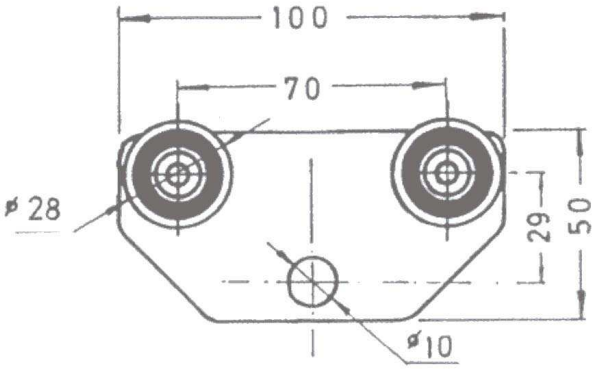

- Body: zinc plated steel.
- Wheels: zinc plated steel.
- Axles: zinc plated steel.

- Load per trolley = 40 Kgr.

CABLE TROLLEY Ref. 2502-28-34

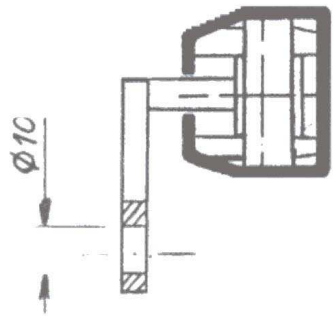

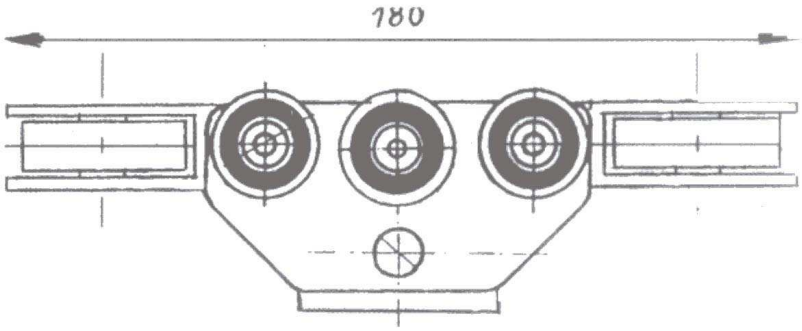

- Body: zinc plated steel.
- Wheels: zinc plated steel.
- Axles: zinc plated steel.

- Load per trolley = 20 Kgr.